MRF30-IC REF

REV.	ECN #	DESCRIPTION OF CHANGE	DATE	BY	MFG ENG
01	N/A	INITIAL RELEASE	09/21/17	SAB	

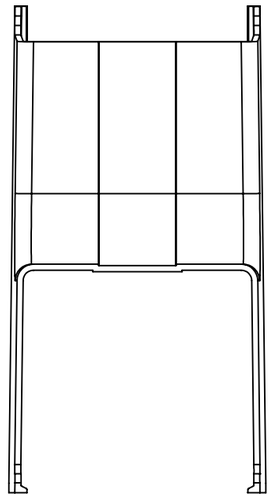

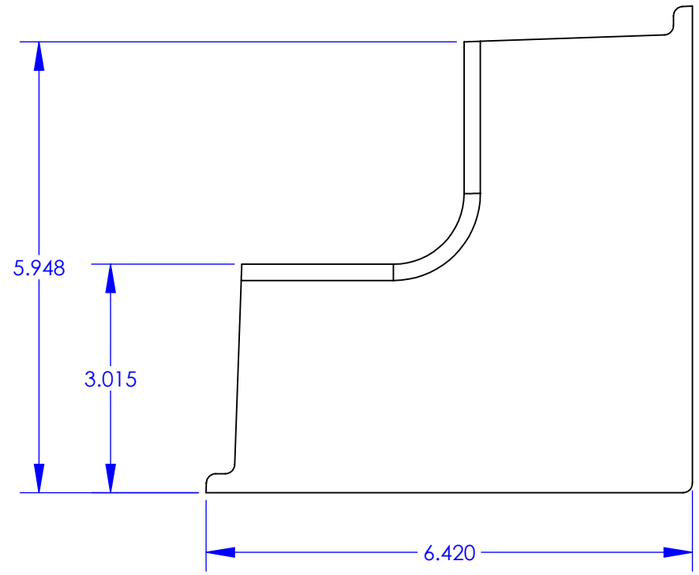

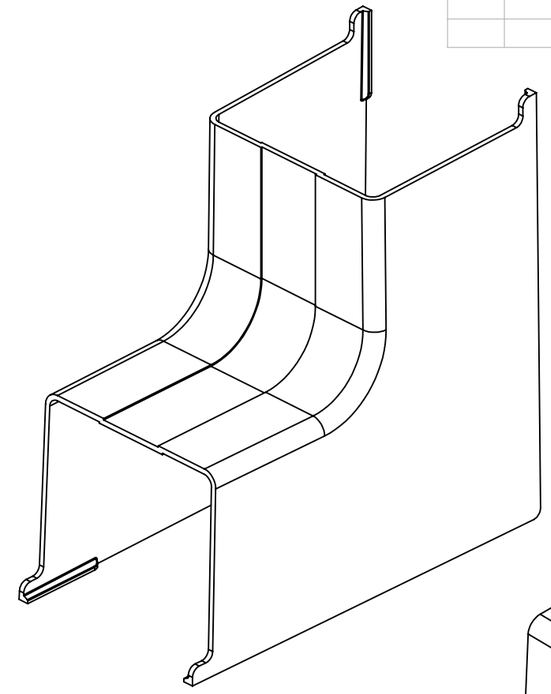

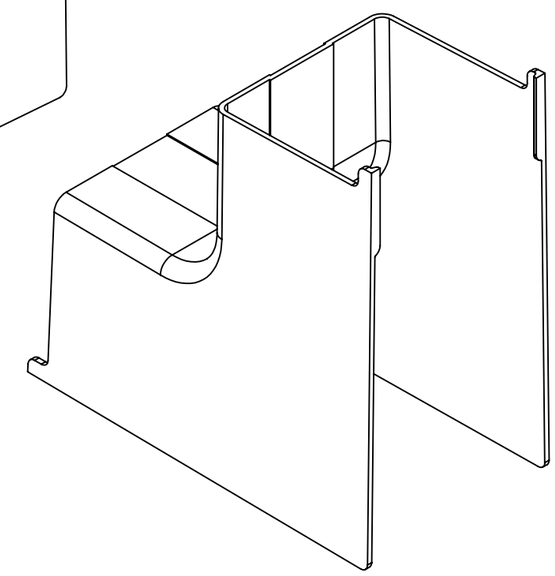

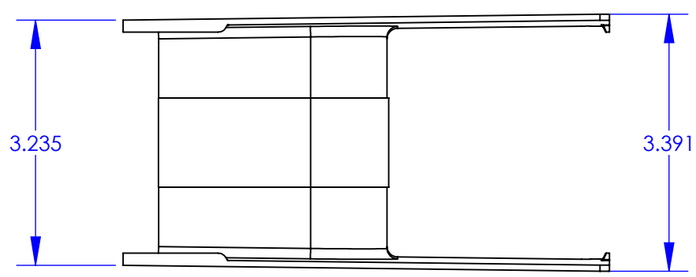

STOCK CODE	DESCRIPTION	COLOR
039-680-10	MRF30-IC-E-IV	EXTERIOR IVORY

UNLESS OTHERWISE SPECIFIED
DIMENSIONS ARE IN INCHES
TOLERANCES ARE:
FRACTIONS: ±1/32 DECIMALS: .XX=±.03 .XXX=±.010 ANGLES: ±1°
ALL FLATS TO BE ±.005

NO SHARP EDGES OR BURRS ALLOWED

MATERIAL: SEE TABLE
FINISH: SEE TABLE

DO NOT SCALE DRAWING

THIS DOCUMENT AND THE INFORMATION CONTAINED THEREIN ARE CONFIDENTIAL & PROPRIETARY TO MULTILINK AND MAY NOT BE COPIED OR DISCLOSED TO OTHERS WITHOUT A WRITTEN CONSENT FROM MULTILINK. THE INFORMATION IS TO BE PROMPTLY RETURNED TO MULTILINK UPON REQUEST.

DRAWN BY: SAB	DATE: 09/21/2017	
CHECKED:	DATE:	
MFG ENG:	DATE:	
QUALITY ENG:	DATE:	

Multilink

MRF30-IC
3" I/S CNR
PLASTIC SQ MLDG

SIZE B | DWG. NO. MRF30-IC REF | REV. 01

SCALE: 1:2 | CAD FILE: MRF30-IC REF | SHEET: 1 OF 1