MRF30-R17 REF

REV.	ECN #	DESCRIPTION OF CHANGE	DATE	BY	MFG ENG
01	N/A	INITIAL RELEASE	09/25/17	SAB	

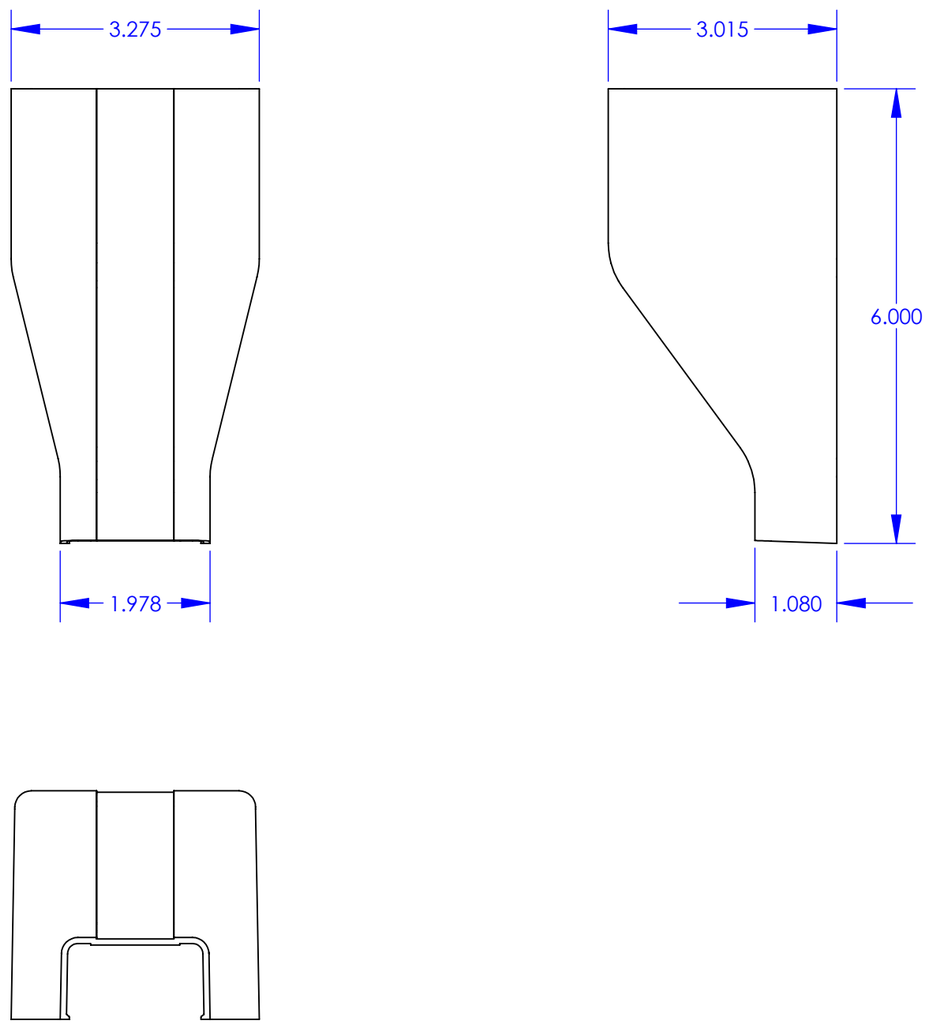

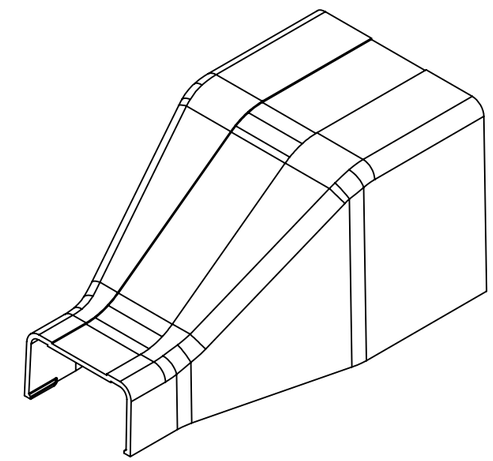

STOCK CODE	DESCRIPTION	COLOR
039-684-10	MRF30-R17-E-IV	EXTERIOR IVORY

UNLESS OTHERWISE SPECIFIED
DIMENSIONS ARE IN INCHES
TOLERANCES ARE:
FRACTIONS: ±1/32
DECIMALS: .XX=±.03 .XXX=±.010
ANGLES: ±1°

ALL FLATS TO BE ±.005

NO SHARP EDGES OR BURRS ALLOWED

MATERIAL: SEE B.O.M.

FINISH: SEE TABLE

DO NOT SCALE DRAWING

THIS DOCUMENT AND THE INFORMATION CONTAINED THEREIN ARE CONFIDENTIAL & PROPRIETARY TO MULTILINK AND MAY NOT BE COPIED OR DISCLOSED TO OTHERS WITHOUT A WRITTEN CONSENT FROM MULTILINK. THE INFORMATION IS TO BE PROMPTLY RETURNED TO MULTILINK UPON REQUEST.

DRAWN BY: SAB	DATE: 09/25/2017
CHECKED:	DATE:
MFG ENG:	DATE:
QUALITY ENG:	DATE:

Multilink

MRF30-R17
3 - 1.75 REDUCER
PLASTIC SQ MLDG

SIZE: B
DWG. NO.: MRF30-R17 REF
REV.: 01
SCALE: 1:2
CAD FILE: MRF30-R17 REF
SHEET 1 OF 1